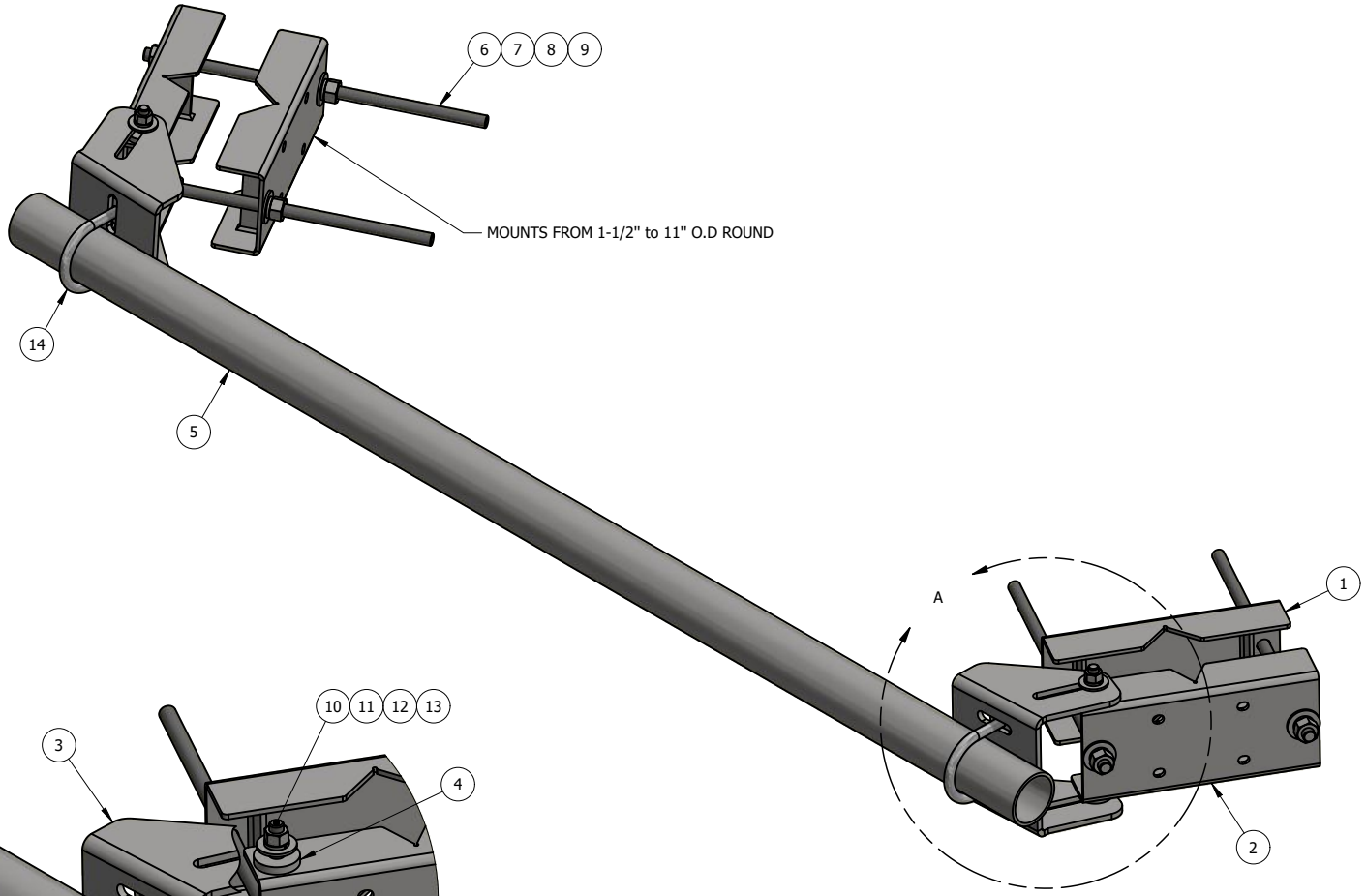

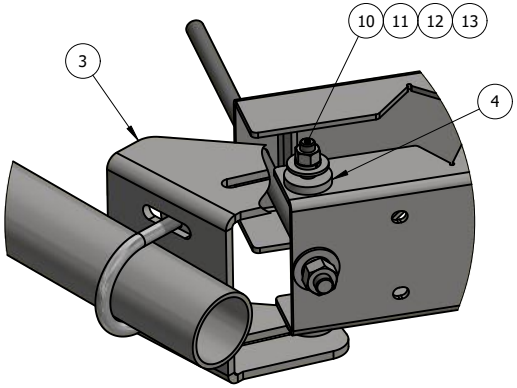

DETAIL A

ITEM	PART #	QTY	DESCRIPTION	LENGTH	FINISH	UNIT WT
1	AM1028-8U.01	2	INNER ADJUSTABLE CHANNEL CLAMP WELDMENT		HDG	12.14
2	AM1028-8U.04	2	OUTER ADJUSTABLE CHANNEL CLAMP WELDMENT		HDG	13.17
3	FM-SU	2	3/8" PLATE		HDG	12.63
4	FM-SUS	4	3/8" PLATE		HDG	0.29
5	P35-84	1	3" STD PIPE	7'	HDG	53.09
6	27-5579-005	4	3/4" x 21" B7 HDG ALL-THREAD	1'-9"		2.63
7	27-5481-005	8	3/4 A36 HDG FLAT WASHER			0.11
8	27-5490-005	8	3/4 HDG LOCK WASHER			0.04
9	27-5500-005	8	3/4 HDG HEAVY HEX NUT			0.21
10	27-4404-005	4	5/8" x 2 1/4" GR.5 HDG BOLT			0.29
11	27-5370-005	4	5/8 A36 HDG FLAT WASHER			0.08
12	27-5380-005	4	5/8 HDG LOCK WASHER			0.03
13	27-5391-005	4	5/8" HDG HEX NUT			0.08
14	27-6190-005	2	GALV. 5/8" x 3-5/8" x 5" U-BOLT ASSEMBLY		HG	1.49

THIS DESIGN AND INFORMATION CONTAINED ON THIS PRINT IS THE PROPERTY OF VALLEY FAB CORPORATION. ANY REPRODUCTION, DUPLICATION OR TRANSFER OF THE PROPRIETARY CONTENT IS PROHIBITED WITHOUT WRITTEN PERMISSION.

STANDARD TOLERANCES:
(UNLESS OTHERWISE NOTED)
FRACTIONS ±1/16"
DECIMALS ±0.01"
ANGLES ±0.5°

NEWAVE TOWER COMPONENTS. 503-792-3739
10910 PORTLAND RD. BROOKS, OR 97305

TOTAL WT: 148.5 LB
QTY:
FINISH:
JOB #:

TITLE: FACE MOUNT FOR ADJ. TAPER TOWER W/ 3-1/2" O.D. PIPE x 7' LONG

DRAWN BY: WJ
DATE: 7/17/2018
CHK'D BY: KY
DRAWING NO. FM-A3-7

SERIES: TOWER ANTENNA MOUNT
SHEET: 1 OF 1