REV	BY	DESCRIPTION	DATE

ITEM	PART #	DESCRIPTION	QTY.
1	AM1032-19.01	PIPE-TO-PIPE CLAMP WELDMENT	2
2	AMCS3.01	HALF CLAMP FOR 1-1/2" TO 3-1/2" ROUND MEMBER	2
3	AMCS8.01	HALF CLAMP FOR 3-1/2" TO 9" ROUND MEMBER	2
4	25- TR12-6	GALV. 1/2" ALL THREAD @ 6" LONG	4
5	27-5200-005	GALV. 1/2" FLAT WASHER	8
6	27-5210-005	GALV. 1/2" LOCK WASHER	8
7	27-5220-005	GALV. 1/2" HEAVY HEX NUT	8
8	25- TR58-12	GALV. 5/8" ALL THREAD @ 12" LONG	4
9	27-5370-005	GALV. 5/8" FLAT WASHER	8
10	27-5380-005	GALV. 5/8" LOCK WASHER	8
11	27-5390-005	GALV. 5/8" HEAVY HEX NUT	8

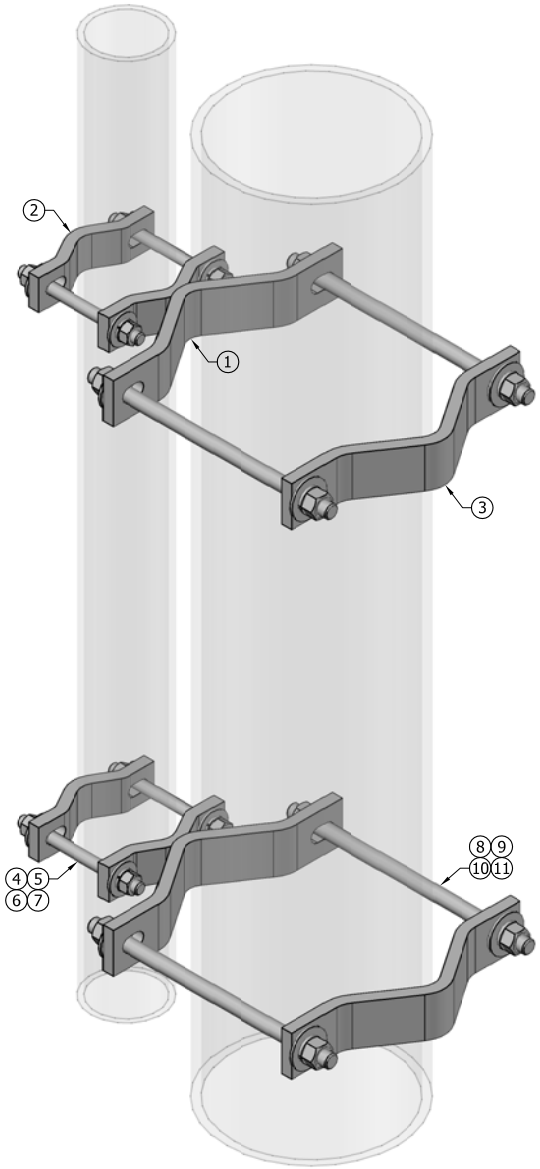

\\FILESERVER\Drafting Data\Drafting Files\Draft\PROJECT\NTC\NEWAVE MASTER CATOLOG\DWG\AM1032 - SERIES.dwg

STANDARD TOLERANCES:
(UNLESS OTHERWISE NOTED)
FRACTIONS ±1/16"
DECIMALS ±.005"
ANGLES ±.5˚

THE DESIGN AND INFORMATION CONTAINED ON THIS PRINT IS PROPERTY OF VALLEY FAB CORP. ANY REPRODUCTION, DUPLICATION, OR TRANSFER OF THE PROPRIETARY CONTENT IS PROHIBITED WITHOUT WRITTEN PERMISSION.

NEWAVE TOWER COMPONENTS. 503-792-3739
10910 PORTLAND RD. BROOKS, OR 97305

MATERIAL:	DRAWN BY:	TITLE:
AS SHOWN	KY	PIPE-TO-PIPE ADAPTORS JOIN 1-1/2" TO 3-1/2" O.D. PIPE TO 4" TO 9" O.D. PIPE
HOLES: AS SHOWN	CHECKED BY: CW	SERIES: TOWER ANTENNA MOUNTING
FINISH: HDG	DATE: 01/19/2012	PROJECT NO. - / DRAWING NO. AM1032-19 / SHEET: 1 OF 1